N79-24057

FURTHER DEVELOPMENT OF THE MULTIPACTOR DISCHARGE ELECTRON SOURCE

J. E. Nanevicz and R. C. Adamo
SRI International

BACKGROUND

At the last spacecraft charging conference, we described a rugged electron gun developed for use in the study of the behavior of spacecraft insulating materials (ref. 1). In this system, electrons are generated using a multipactor discharge between a pair of plates with a diameter equal to the desired target diameter so that a uniform, collimated, large-area electron beam is produced. Multipactor discharge occurs when two electrodes in vacuum are driven with an RF source of the proper frequency. An initial electron occurring near the first electrode will be accelerated across the gap, strike the second electrode and generate one or more secondary electrons just as the field changes polarity. The secondary electrons, in turn, are accelerated across the gap and generate additional secondaries when they strike the first electrode. In this way the number of electrons in the breakdown cascades until various loss mechanisms come into play and limit further growth in the number of electrons participating in the breakdown. Thus, the multipactor breakdown may be thought of as a sheet of electrons oscillating between a pair of electrodes in synchronism with the applied RF field. The desirable features of the multipactor electron source include high immunity to degradation from contamination and virtually no dependence of beam size and uniformity on accelerating voltage.

The original multipactor electron gun setup shown in figure 1 included a control grid to adjust beam current, but the beam accelerating voltage was applied between the electron source and the target. The multipactor electron source has since been modified to include the electron accelerating system within the source. As a result, the region between the source and the target is free of fields produced by the source electrodes. This arrangement is more suitable for the simulation of spacecraft charging conditions.

In addition, a beam current feedback control system has been incorporated to maintain a constant source current density over a wide range of beam accelerating voltages.

MODIFIED MULTIPACTOR SOURCE

A photograph of one of the multipactor electron sources presently in use is shown in figure 2. The one shown generates a beam 10 inches in diameter.

A second unit, currently being used in discharge characterization, generates a beam 12 inches in diameter.

All of the surfaces visible in figure 2, including the grid through which the beam is emitted, are at ground potential. The electron source is supported via mounting fixtures on the back surface of the assembly. RF and dc voltages are supplied to the source via connectors also located on the back surface of the assembly.

A schematic of the new source design is shown in figure 3. The multipactor discharge region is essentially the same as it was in the earlier system. The lower plate is perforated to allow the escape of electrons to form the beam. It may be considered to constitute the "cathode" of the electron gun. The control grid, located below the perforated multipactor plate, has been modified by the addition of a solid skirt which extends up to cover the entire multipactor gap. This modification was found to be necessary to allow complete cutoff of the electron beam. Without the skirt, electrons diffusing radially from the discharge regions are not cutoff by the control grid.

In the present design, an accelerating grid has been added below the control grid. A skirt on the accelerating grid extends upward past the upper multipactor plate. The skirt is capped with a solid metal sheet at its upper periphery. Thus, the accelerator grid and its associated structure completely enclose the electron gun system.

The accelerating grid structure is connected to system ground. Electrons are accelerated by biasing the multipactor cathode negative with respect to the accelerating grid. With this arrangement, both RF and dc fields are completely contained within the outer shell of the gun.

To simplify the problem of providing high-voltage-dc isolation of the RF source, the multipactor discharge is driven using transformer coupling between a pair of coils. The primary and secondary windings of the transformer are located one on the inside and one on the outside of a Teflon cylinder. Practical considerations of circuit values associated with the transformer coupling scheme caused the operating frequency to be reduced from 150 MHz to 50 MHz.

BEAM CURRENT CONTROLLER

Although the basic multipactor source is basically stable and provides a reasonably constant beam current over periods of the order of minutes, certain applications require that the tests continue unattended for periods of 24 hours and more. Over this length of time, it was found that unacceptable changes in beam current could occur. Also, in working with the multipactor electron source, it was found that there was some interaction between beam current and beam accelerating voltage. To avoid these drawbacks of the multipactor electron gun, a feedback system for controlling beam current was developed.

The beam-current-control system is shown as a box in figure 3. Essentially, it maintains the total return current to the electron source constant. This approach was chosen as being most representative or orbital conditions in which a large-scale ambient current density illuminates the vehicle as a whole, while local current densities are determined by local conditions such as surface charge on insulating materials.

Essentially, the system senses the return current and generates an appropriate ac signal which is fed through a high-voltage isolation system to a grid voltage power supply controller maintained at "cathode" potential. The grid-to-cathode voltage is adjusted in this way to establish the required return current.

TESTS OF THE MULTIPACTOR SOURCE

Beam Uniformity

The uniformity of the electron beam generated by the electron source was investigated in a vacuum chamber equipped with a Faraday cup mounted on a movable arm to permit it to be swept through the beam. Measured results indicate that, over the diameter of the source, the current density is uniform to within 30%.

Arrangements were made to rotate the source in increments of 45° to make certain that there were no nonuniformities anywhere within the beam.

Further checks of beam uniformity were carried out by using the beam to illuminate a metal sheet coated with cathode-ray-tube phosphor. A highly uniform glow was observed.

Current Controller Functioning

The beam current controller was tested by setting it at a given current and monitoring the return current periodically for roughly 24 hours. It was found that the beam current was maintained within $\pm$ 5% over this period.

In a second test, the return current was set at a predetermined value within the range 1 to 10 nA/cm^2 and the beam energy was varied from 5 to 15 KeV. The beam return current was maintained constant to within 5%.

APPLICATION OF MULTIPACTOR GUN

The new multipactor electron source has been used for several months now in various experiments involving spacecraft charging simulation. These have involved frequent opening of the vacuum system to install new test samples and to adjust instrumentation. Aside from occasional cleaning of the multipactor electrodes, no maintenance has been necessary. Reliable operation has

been obtained with a minimum of time for adjustment of either RF or dc systems. It is felt that the additional complexity of the present multipactor electron gun is more than offset by the increased capability and operating convenience.

REFERENCE

1. Nanevicz, J. E. and Adamo, R. C., "A Rugged Electron/Ion Source for Spacecraft Charging Experiments," Proceedings of the Spacecraft Charging Technology Conference, U.S. Air Force Academy, Colorado Springs, Colorado, 27-29 October 1976.

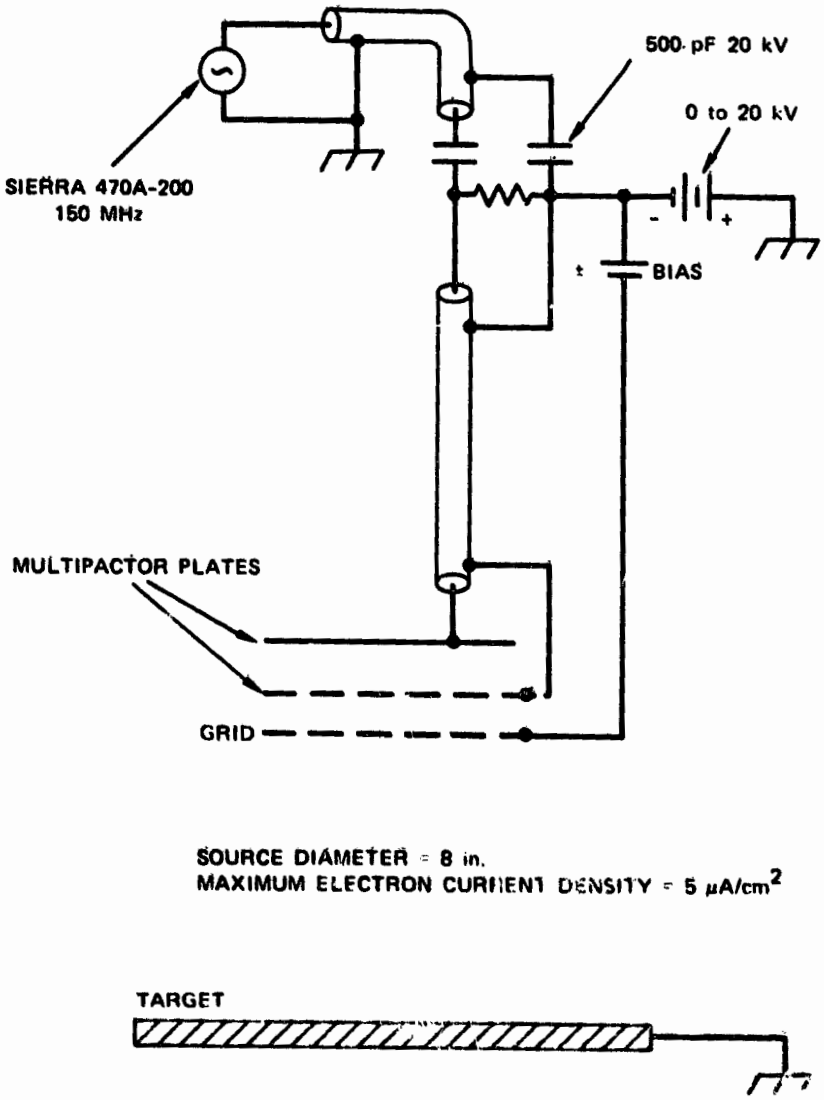

FIGURE 1 SCHEMATIC OF ORIGINAL MULTIPACTOR ELECTRON SOURCE

FIGURE 2 PRESENT MULTIPACTOR ELECTRON SOURCE

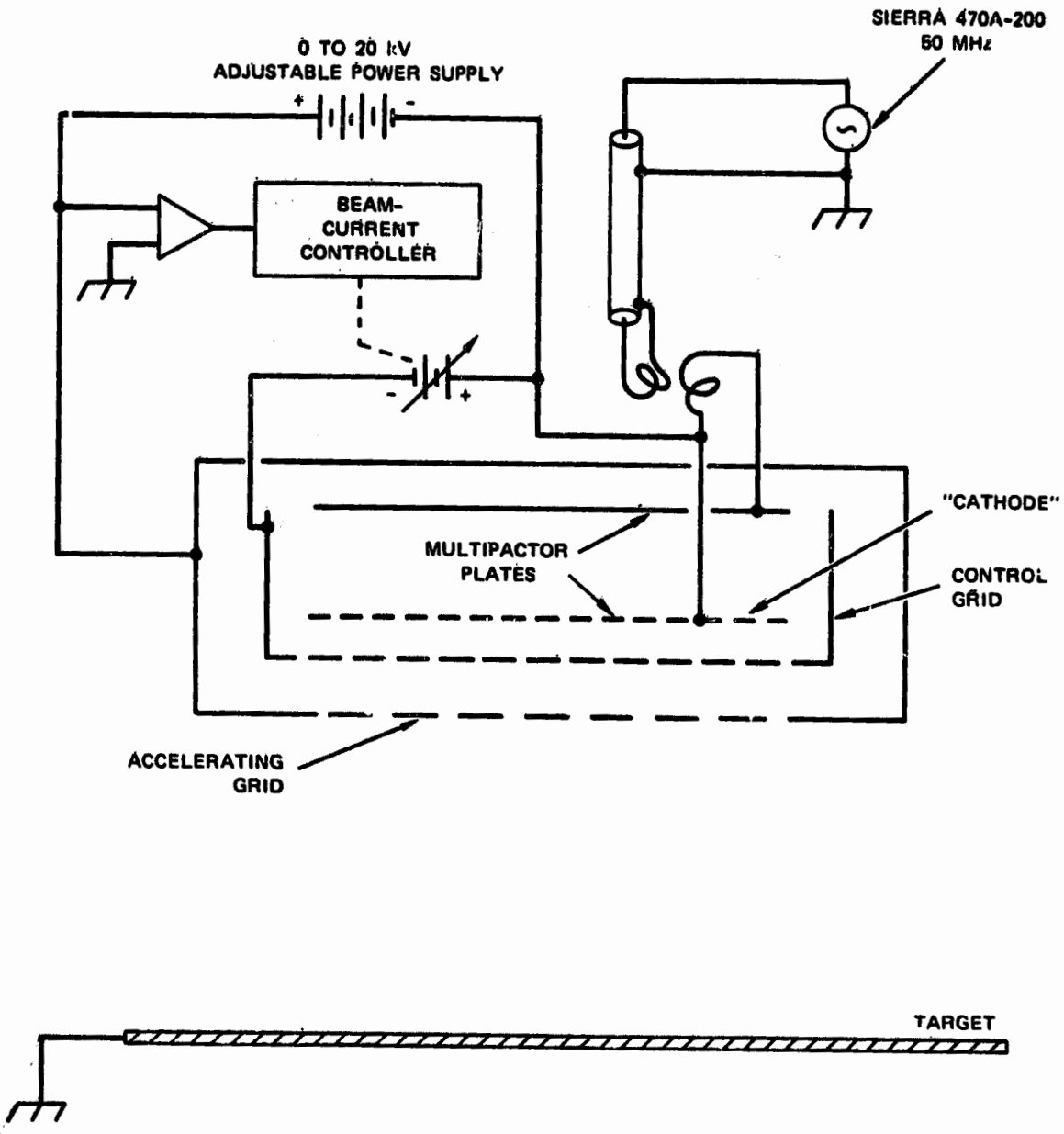

FIGURE 3 SCHEMATIC OF PRESENT MULTIPACTOR ELECTRON SOURCE